UTDesign II: Summer 2018

Erik Jonsson School of Engineering & Computer Science
The University of Texas at Dallas

THUNDERSTORM

Intelligent Power Controller

Mentors: Dinesh Bhatiar

Abigail Malone(EE), Bryant Siegfried (CE), Kevon Bradford (CE), Jason Creel (EE), Susan Elyian(EE)

Background

In Modern LTE networks, shutdown often results in use of a battery backup power supply that powers on each technology on a base station (2G, 3G, & 4G). Although useful, this backup power is inefficient. In the event of a hurricane or any form of setback leading to a network shutdown, this backup power supply does not allow the station to run very long.

Problem

Backup power is inefficient when powering on the whole base station. The fix is to make the backup power supply selective, so that priority is given to the technologies that will allow people to stay in touch. Energy will be conserved and the base station will be maintained for a longer amount of time. Our relay module boxes allow this to happen. Via Wi-Fi connectivity from the top and the bottom of the tower, the technologies will be switched on/off through the user.

Objectives

Resilient: able to withstand tough weather

Power efficient: maintain low energy demands to operate for more time

Automated: minimize dependency on operator action for faster response.

Customizable: allow technicians to preset load stripping settings upon loss of power

Hardware Design

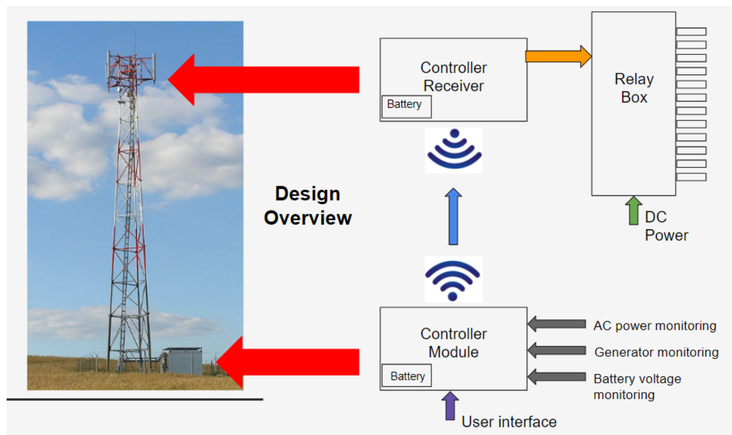

SDII Goal: Design a PCB to decrease size of the prototype concept proven in Senior Design I, while allowing for customization and development. The platform will support Wi-Fi, Ethernet, and storage.

PCB design consists of an AC/DC converter that feeds into a switch. This switch will control the micro controllers and maintain charge of the relay box supply from the lithium ion battery. The boxes are stationed one: at the bottom of the tower where logic is implemented and two: at the top of the tower where instructions are sent and allow technologies to be switched off.

Through the microcontrollers, the relays will be toggled on/off and be demoed via lightbulbs that will turn on/off similar to the technologies.

Software Design

Create a user interface to control relay switching. This includes low, mid, and high bands for all technologies.

Data collection implemented in C code, controlled by the CC1350 launchpad from TI.

ADC built within the microcontroller: 10-bit, 3.8 mV resolution

Security feature implementation through a login screen as well as data encryption.

IP packet handling to decipher menu selection between the two relay modules as well as enable the user to potentially access the controller via website.

Results

Printed Circuit Board

Compact: custom PCB integrates all major components.

Self charging: Charges it's own battery from normal power source.

Load stripping: below 48V, the controller will strip loads based on 2V decrements. Upon a reduction to 40V, all loads will be stripped after 30 seconds.

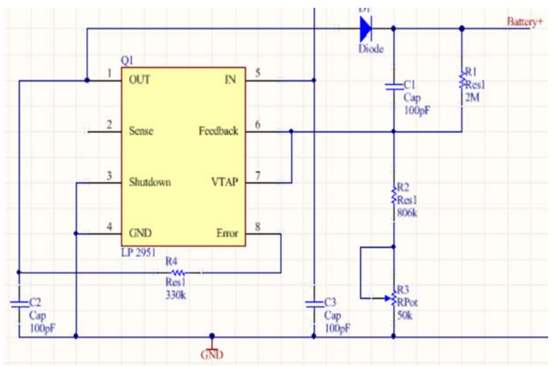

Wireless Microcontroller Handling

Functional wireless output control with easy to use user interface

No packet loss up to 130ft using at an 860 MHz radio frequency

CC1350 Launchpads

Conclusions

The ability to save energy and create a user interface that will allow engineers to control how power controlled for a station will prove to be a great enhancement for the consumer experience. Battery power will be conserved, priority technologies will remain on for longer periods of time, and connection for all will be maintained. With the ability to have the user control power options, the preset, relay control and temperature at tower reading, our intelligent power controller will be more than beneficial.

Ethics Statement

We used only original designs and verified open-source software and hardware resources in the development of this project.

Special Thanks To

UTDesign staff, T-Mobile, Dr. Tacca, and Dr. Bhatia